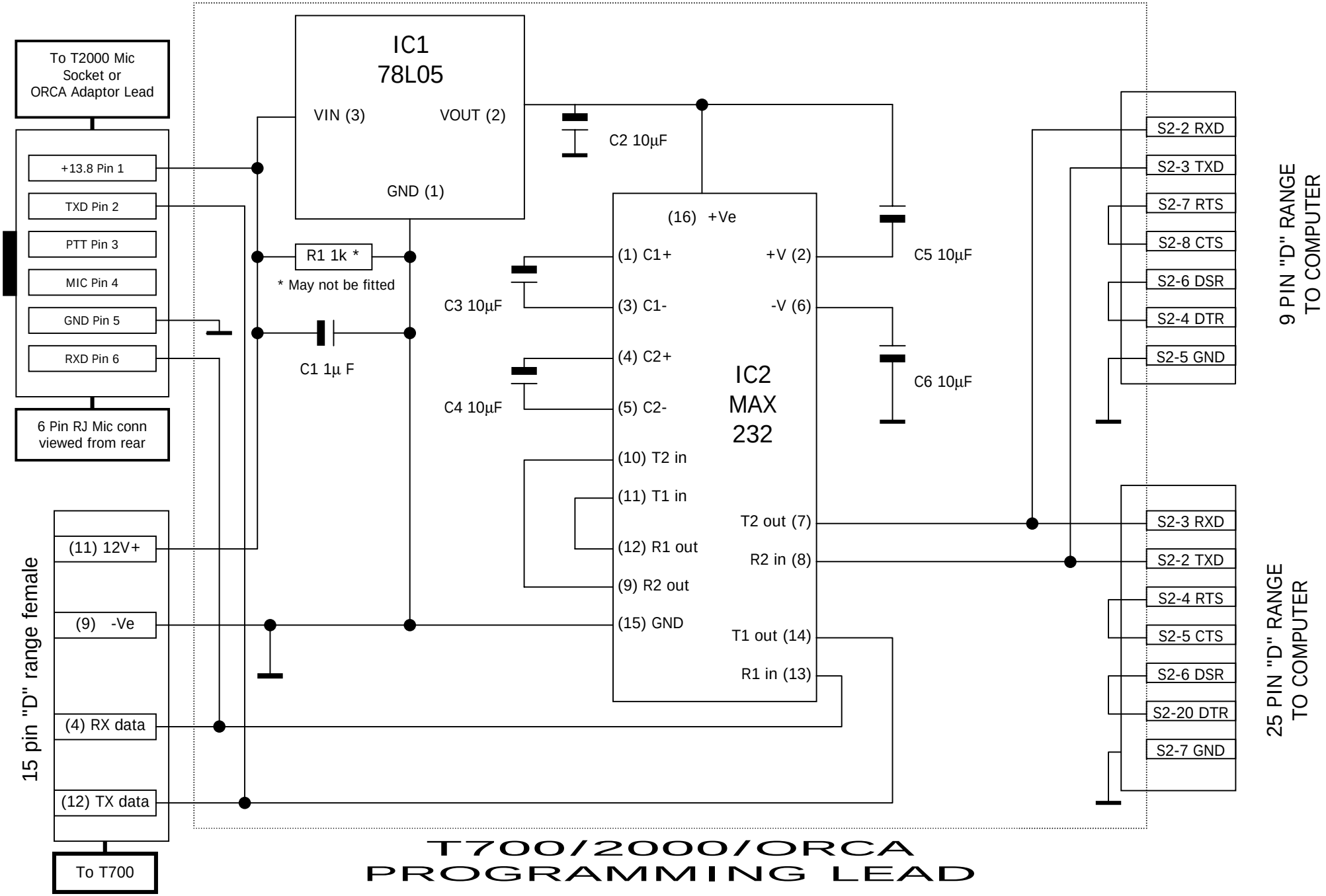

T700/2000/ORCA PROGRAMMING LEAD

PROGRAMMING LEAD CCT new.doc